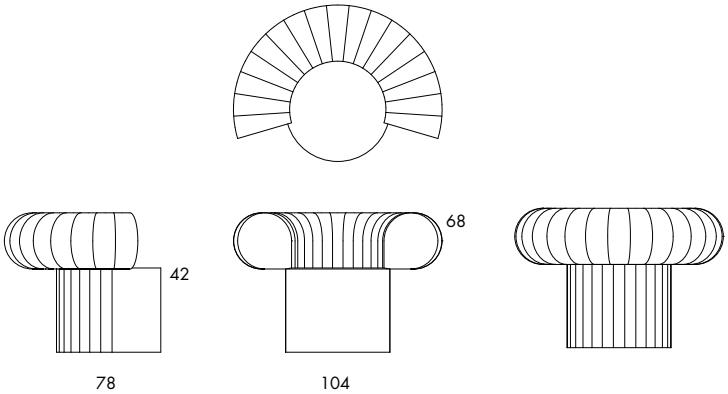

O770 | O771 | O772

ARMCHAIR. Frame of molded polyurethane with nosag springs. Footplate in black lacquered steel. Fully dressed in fabric. The fabrics are called Uniform Melange (Kvadrat) , Gentle 2 (Kvadrat), Adra (Kvadrat) and Athlon/Athlon Plus (Gabriel). Big talk is available in three versions, Big Talk 9 with a color spectrum of 9 colors is available in 5 standard variants. Big Talk 2 with a combination of 2 colors is available in 5 standard variants. Big Talk 2 Mix has a color combination of 2 colors but in the same pattern as Big Talk 9 and is available in 1 standard variant. When choosing other color combinations in textile Uniform Melange , Gentle 2, Athlon/Athlon Plus or Arda a net cost will be added as below. Other designs may be offered for projects.

	O770 | O771 | O772
Seat height	42
Overall height	68
Overall width	104
Overall depth	78

O770 | **BIG TALK**

Big Talk 9 Color numbers		*Red	*Brown	*Green	*Velvet	Ocra*
		Uniform Melange	Uniform Melange	Uniform Melange	Gentle 2	Athlon/Athlon Plus
		Kvadrat	Kvadrat	Kvadrat	Kvadrat	Gabriel
	1	593	293	883	783	62119
	2	583	283	983	873	68251
	3	563	353	993	963	61140
	4	633	333	763	683	60141
	5	683	363	753	663	65136
	6	663	553	833	553	65135
	7	653	463	963	443	68253
	8	553	413	933	223	68252
	9	623	103	813	203	61194

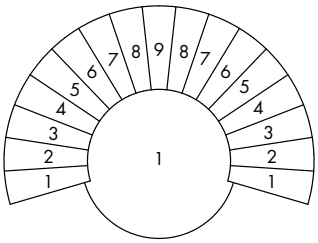

O770 | Big Talk 9

O770 | Big Talk 9 | Red

O770 | Big Talk 9 | Brown

O770 | Big Talk 9 | Green

O770 | Big Talk 9 | Velvet

O770 | Big Talk 9 | Ocra

O771 | **BIG TALK**

Big Talk 2 & 2 Mix Color numbers		*Red	*Brown	*Green	*Velvet	*Ocra	*Black and white
		Uniform Melange	Uniform Melange	Uniform Melange	Gentle 2	Athlon/ Athlon Plus	Arda/Uniform Melange
		Kvadrat	Kvadrat	Kvadrat	Kvadrat	Gabriel	Kvadrat
	1	593	293	883	783	62119	193 UM
	2	583	283	983	873	68251	201 Arda

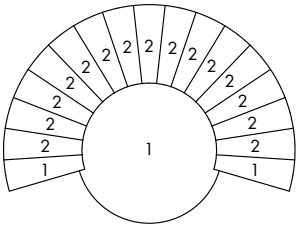

O771 | Big Talk 2

Athlon - meets US flammability standard

Athlon Plus - meets EU flammability standard

O771 | Big Talk 2 | Red

O771 | Big Talk 2 | Green

O771 | Big Talk 2 | Velvet

O772 | **BIG TALK**

Big Talk 2 & 2 Mix Color numbers		*Red	*Brown	*Green	*Velvet	*Ocra	*Black and white
		Uniform Melange	Uniform Melange	Uniform Melange	Gentle 2	Athlon/ Athlon Plus	Arda/Uniform Melange
		Kvadrat	Kvadrat	Kvadrat	Kvadrat	Gabriel	Kvadrat
	1	593	293	883	783	62119	193 UM
	2	583	283	983	873	68251	201 Arda

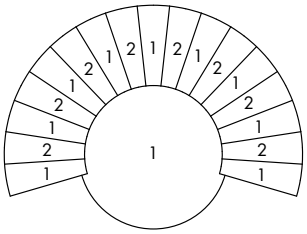

O772 | Big Talk 2 Mix

Athlon - meets US flammability standard

Athlon Plus - meets EU flammability standard

O772 | Big Talk 2 Mix | Black & White

Inspire. Create. Deliver.

P4.