MAZU.

OYSTER
COLLECTION

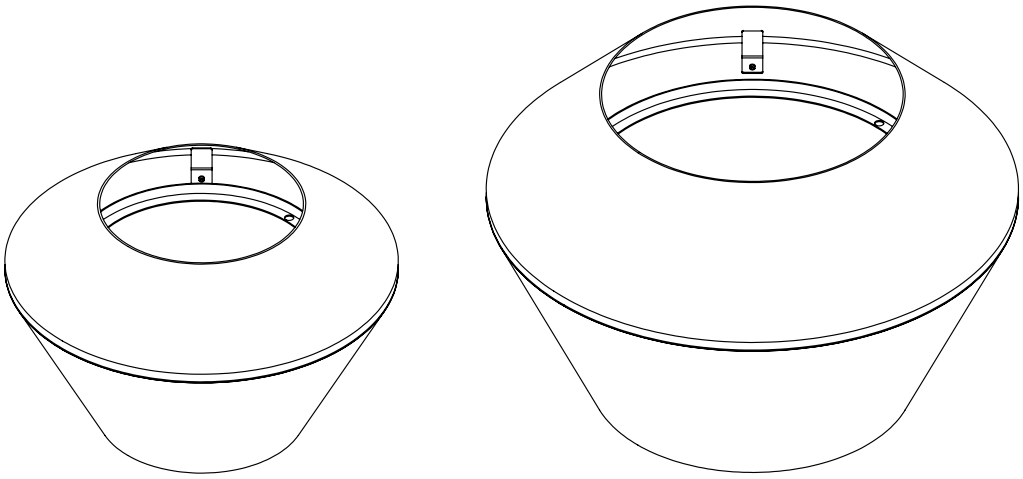

PRODUCT SPECIFICATIONS*

Material	Powdercoated Aluminium Cortensteel
Size	Large: Ø850 x 550 mm - 2'9,5" x 1'9,7" Extra Large: Ø1150 x 750 mm - 3'9,3" x 2'5,5"
Weight	Aluminium Large: 17,5 kg - 38,6 lbs Aluminium Extra Large: 31 kg - 68,3 lbs Cortensteel Large: 49 kg - 108 lbs Cortensteel Extra Large: 86,8 kg - 191 lbs
Power consumption	max. 150 W
Voltage	100-240 VAC - 50Hz
Connection	Hardwired, G3x1 mm^2 type H05RN-F recommended
Light source	Custommade LED, 14,4W/m, 140LED/m, 1250LM/m, 2700K, 24VDC CRI>85, Beam Angle 270°
Classification	Ingress protection IP65 (LED) CE Marking, EMC, LVD All components are CE and uL certified
Maintenance	Maintenance free wipe fresh stains with a damp cloth
Warranty	Warranty of 5 year after registration

* custom solutions on request, ask us about it!

FINISHES

LIGHT GREY C31

RUST RAME C32

BRONZE C33

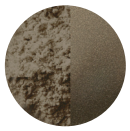

BLACK BROWN C34

MOUNTAIN MOSS C35

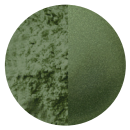

IVORY C36

CUSTOM RAL

CORTEN STEEL

MAZU.

OYSTER
COLLECTION

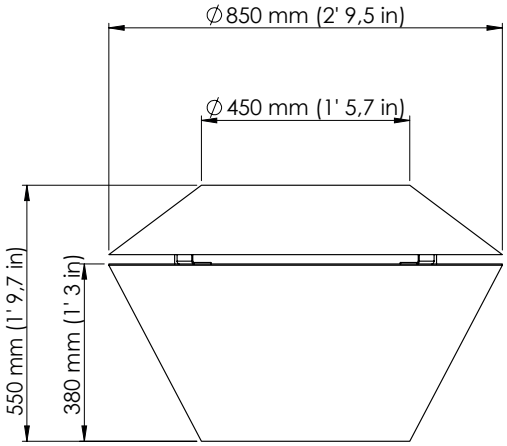

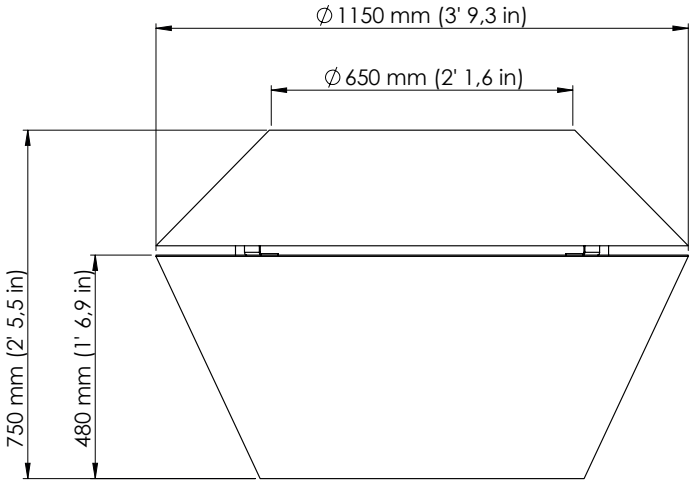

DRIVER SPECIFICATIONS*

Specifications	Bluetooth transmission technology, low power consumption
Dimmer	Fully Dimmable, control brightness/saturation
Classification	Ingress protection IP67 (DRIVER), CE Marking, EMC, LVD All components are CE and uL certified
Control	App Hardwired on existing system
Safety	All components must be correctly assembled and connected to maintain the waterproof rating of the system. The assembled MAZU products are officially certified by SGS to meet IP65 ingress protection requirements.

* custom solutions on request, ask us about it!

COMPATIBLE WITH

Casambi
Custom solutions

DALI
Custom solutions

Custom
solutions

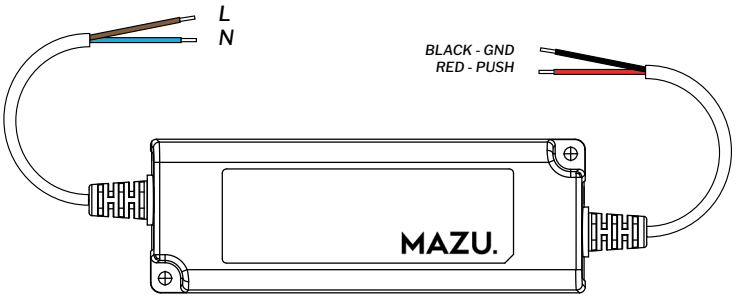

Inspire. Create. Deliver.

P4.